Sintrol Dust Monitors
Company Profile

www.sintrolproducts.com

SINTROL
For Good Measure

Professional experience of more than 35 years

We are committed to the success of our customers and want to build long lasting relationships to offer solutions which bring value for the customer long term. Different customers have different needs. This is why we are constantly improving our product development, technical services and support to drive our customer‘s success.

Sintrol Oy was founded in 1975 specializing in measurement solutions focused on municipal, industrial and environmental technologies.

Since 1993, Sintrol has grown into one of the world’s largest dust monitor manufacturers supplying a wide range of dust measurement devices. Sintrol’s revolutionary dust monitors have been developed and enhanced with state of the art equipment and verified by Finland’s foremost technical universities.

Sintrol provides high quality solutions and dust measuring devices to dozens of industries, including process, power plants, cement plants, equipment manufacturers, metallurgy, food manufacturers, among others.

The cornerstones of our company are developing high-quality solutions which give genuine customer benefits, the highest quality standards in production and superior customer service.

Sintrol facts:
Family owned. Founded 1975.

Headquarters: Helsinki, Finland
Sales Offices: China, India
Subsidiaries: Russia, Ukraine

Mission

Sintrol provides high quality, customer oriented dust measurement solutions, improving its customer’s processes and monitoring their particulate emissions.

Sintrol works closely with customers to build long term relationships centered around creating and delivering innovative and optimal solutions.

Vision

With the most advanced measurement principle as our foundation, we strive to be the global market leader for dust measurement needs. With a commitment to customer based R&D, innovative technology and the continued development of a global network of partners, we not only want to be the world’s most trusted dust measurement solution provider, we want to be the largest dust measurement provider.

Strategy

Sintrol sells its products primarily through a distributor network that is closely supported by branch offices in Helsinki, Beijing and Delhi.

Dust monitoring solutions are also provided to a diverse portfolio of global OEM partners.

Best solutions for managing your dust removal process

Sintrol dust monitors reduce discovery time for filter malfunctions, thereby, reducing maintenance costs, preventing equipment contamination and product loss, and ultimately increasing plant availability. Sintrol monitors are of the highest quality and most advanced technology. They are easy to use, virtually maintenance free, and can be used in numerous industries worldwide.

Measuring Principle

Sintrol dust monitors are based on a unique Inductive Electrification technology. The measurement is based on particles interacting with an isolated probe mounted into the duct or stack. When moving particles pass nearby or hit the probe a signal is induced. This signal is then processed through a series of Sintrol's advanced algorithms to filter out the noise and provide the most accurate dust measurement output.

Classic triboelectric technology is based on the DC signal, which is caused by particles making contact with the sensor to transfer charges. Compared to DC based measurements, the Inductive Electrification technology is more sensitive and minimizes the influence of sensor contamination, temperature drift and velocity changes. By using the Inductive Electrification technology it is possible to reach extremely low dust concentration measurement.

Because dust monitoring equipment is many times installed into potentially dangerous atmospheres Sintrol has a priority to develop EX approved instruments.

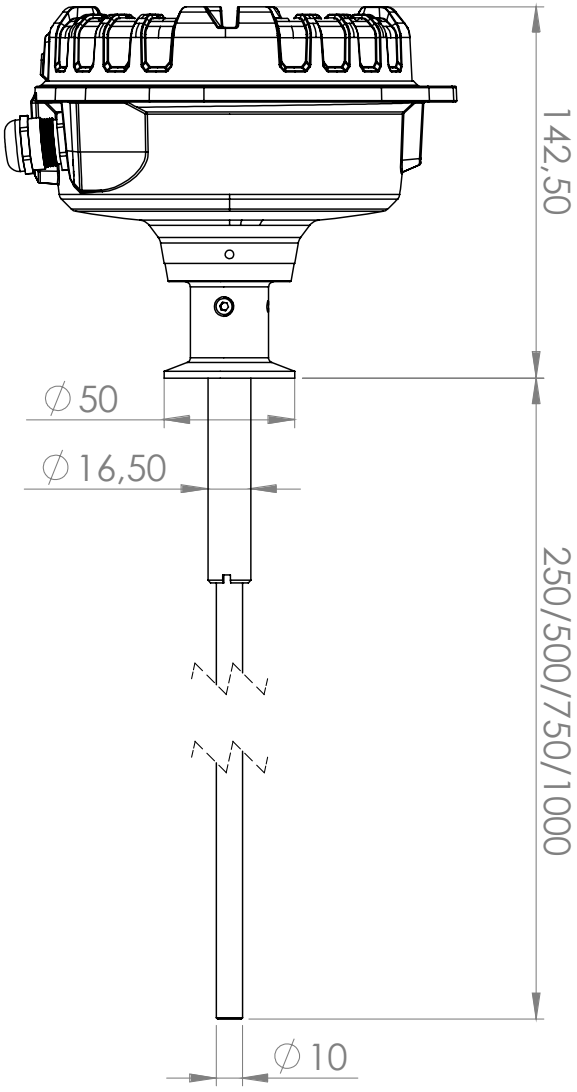

Family of monitors to meet all dust monitoring needs

Sintrol Snifter Series

Sintrol New S300 Series

Sintrol Dumo

Process monitoring

Filter Leak Detection
In each area of the process where there are single or multiple compartment baghouses, Sintrol Snifter Series monitors are the perfect solution to provide notification to the operator of deterioration or breakage of the filter bags. This provides early detection when excess particulate matter is in the process and releasing out of the stack. The Sintrol Snifters are largely maintenance free devices that can measure extremely low dust levels. EX versions are also available for zone 22.

Trend Monitoring
In many larger or combined outlet ducts, a continuous trend measurement signal is preferred to get a constant reading on dust level changes in the process. The Sintrol S300 series is equipped with a 4–20 mA output signal and all the features necessary to provide the end user with a continuous output. With high temperature versions (up to 700°C) available, this is a solution for all areas of the plant with dust measurement needs. The Sintrol S300 series allows the operator to identify increasing trends in the dust levels and possibly identify sources of extra pollutants in its process.

For plants that use Electrostatic Precipitators (ESP), our Sintrol E-Spy is the industry's only probe based monitor allowing the end user to get a continuous trend measurement in 4–20 mA output after an ESP. The customer can learn about the effectiveness of its ESP, optimize the hammering process, and make adjustments to maximize the efficiency of the filter system utilizing the Sintrol E-Spy. Also available in EX models for zones 20, 21 and 22.

Emissions monitoring

For each stack in the plant, Sintrol's S304 and S305 monitors can be calibrated to provide readings in mg/m^3 for actual emissions amounts. The QAL1 certification process according to EN15267 for our S305 has been started early 2019. These virtually maintenance free monitors are a less expensive and reliable alternative to the traditional opacity monitors that have been used historically. Also available in EX models for zones 20, 21 and 22.

Ambient air monitoring

The Sintrol Dumo is the ideal monitor for explosion prevention, atex zone and workplace supervision. In welding areas, warehouses, or other environments with high ambient dust concentrations, the Sintrol Dumo monitors levels of harmful dust in the work environment. With a continuous 4–20 mA signal output as well as "Alert" and "Alarm" functions, the dust concentration levels in the workplace can be measured. The same solution has also been used in coal storage yards and for urban dust measurement. The dumo is certified for EX zones 21 and 22.

Sintrol

Ruosilantie 15,
FI-00390 Helsinki, FINLAND
Tel. +358 9 561 7360
e-mail: info@sintrolproducts.com
www.sintrolproducts.com